# Spectrophotometer Protocol (Biotech Series; 2017)

• Uncover and plug in the spectrophotometer

• Turn on spectrophotometer with the 0% transmittance knob (turn left one clockwise)

• Allow the spectrophotometer warm up for 15 minutes before calibrating or running any samples. You must recalibrate every time you change the wavelength.

• Set the wavelength to the instructed setting depending on the color of the sample specified in the chart and make sure the filter lever is at the appropriate position based on the wavelength (look at the diagram to see what the filter lever is). In general, you want to choose a wavelength that is opposite of the color observed. So if the solution is blue, you might choose 560 nm. You may need to fine tune the wavelength using initial, intermediate, and detailed wavelength searches as described on the website below:

.

http://hydrology1.nmsu.edu/teaching/soil698/student_material/spectrometer/page11.htm

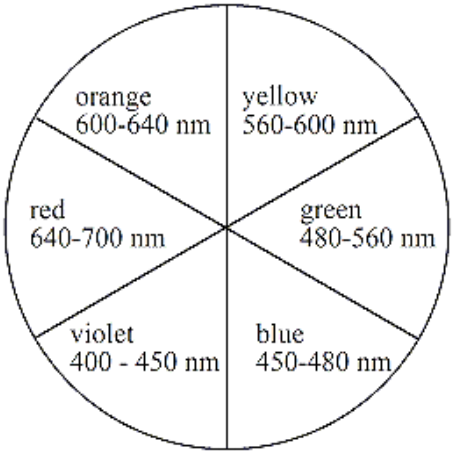


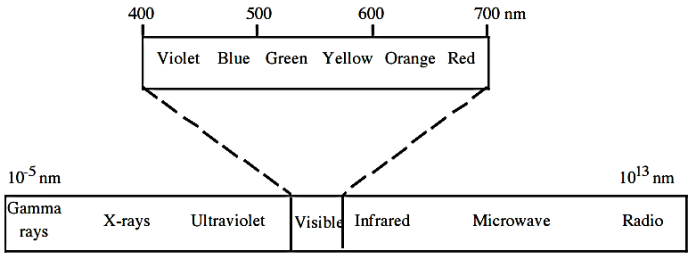


| Approx. Wavelength (nm) | Approx. Color Absorbed | Color Observed |
|---|---|---|
| 400 | Violet | Yellow-green |
| 435 | Blue | Yellow |
| 495 | Green | Purple |
| 560 | Yellow | Blue |
| 650 | Orange | Greenish blue |
| 800 | Red | Bluish green |

•After following the calibration instructions below you can begin placing samples in the cuvettes and fill them ¾ of the way full and putting them in the cell holder and then the sample compartment to record the data.

•If using test tubes line up the line on the tubes and the sample compartment to match. If using cuvettes, you will need to use a cuvette holder.

# Spectrophotometer Protocol (Biotech Series; 2017)

Calibrate

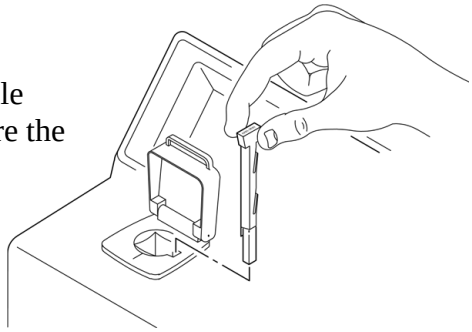

1. <u>If instructed</u>, insert the proper filter on the right area of the sample compartment according to the wavelength. Insert the filters where the clips are facing towards the screen.
2. <u>Ensure sample compartment is empty</u>. Using the 0%T knob (left one) change the data number to 0.00 Make sure that the data value is on Transmittance, if not, press the mode button until the red light by transmittance lights up. (see diagram below)
3. Get an empty cuvette with gloves, and fill to ¾ with distilled water.
4. Wipe the sides of the cuvettes using Kim Wipes to where there are no finger prints, smudges or water on the outsides of them
5. Take out a cuvette holder, and place the cuvette in it with the arrow facing outwards.
6. Place the cuvette holder in the sample compartment with the arrow facing the wavelength knob.
7. Using the 100%T/0A knob (right one) until the Data value on the screen shows 100.0 Transmittance. (see diagram below)
8. Remove the cuvette from the sample compartment. Do not turn the knobs anymore.
9. The spectrophotometer is now calibrated. You may now proceed with collecting your data by inserting solutions into the sample compartment and reading the transmittance or absorbance based on the lab protocol and the data desired.
10. Remember that each time you change the wavelength, you must re-calibrate the machine.

.

12. Cuvette holder

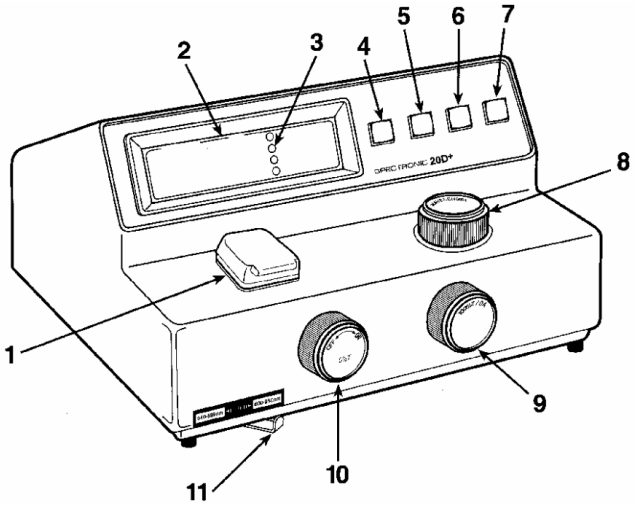


Key:

1. Sample Compartment
2. Digital Readout
3. Mode Indicators
4. Mode Selection
5. Decrease
6. Increase
7. Print
8. Wavelength Control
9. Transmittance/ Absorbance Control (100% T/0A)
10. Power Switch/ Zero Control
11. Filter Lever
12. Cuvette Holder